7V 300mA 85dB PSRR Low Dropout Regulator

GENERAL DESCRIPTION

The ASPL1111 is a series of low dropout regulators with 300mA output capability. By employing a proprietary design technique together with highly reliable manufacturing process, it can work under a wide range of input voltage from 1.7V to 7V, while still achieving a low dropout voltage.

Though ASPL1111 only consume 35uA quiescent current, it achieves 85dB PSRR at 1KHz with an ultra-fast control loop design. It also guarantees 2% output voltage accuracy and all types of self-protection features, such as output current limit, short circuit protection and thermal shutdown.

The ASPL1111 is available in SOT23, SOT23-5L and DFN1x1-4L package.

FEATURES

- Wide operation range: 1.7 – 7V
- Output voltage accuracy: 2%
- Maximum output current: 300mA
- Low quiescent current: 35uA
- Line regulation: 0.01%/V
- PSRR @ 1KHz: 85dB
- Wide operating temperature: -40 ~ 125°C
- Over temperature shutdown: 150°C
- Short circuit current: 140mA
- 2KV HBM ESD

APPLICATION

- Battery powered portable devices
- Smart phone, tablet, wireless modules
- CIS power supply for camera module
- Power supplies for RF, PLL, VCO

TYPICAL APPLICATION

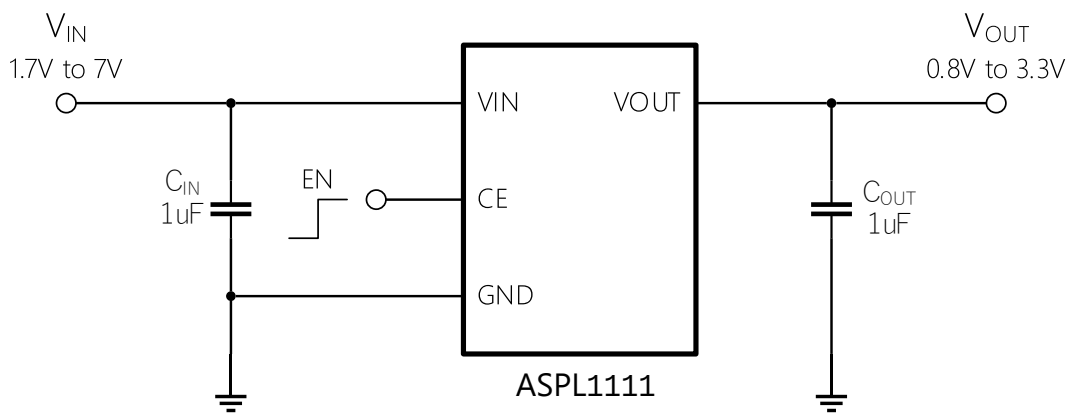

PIN ASSIGNMENT

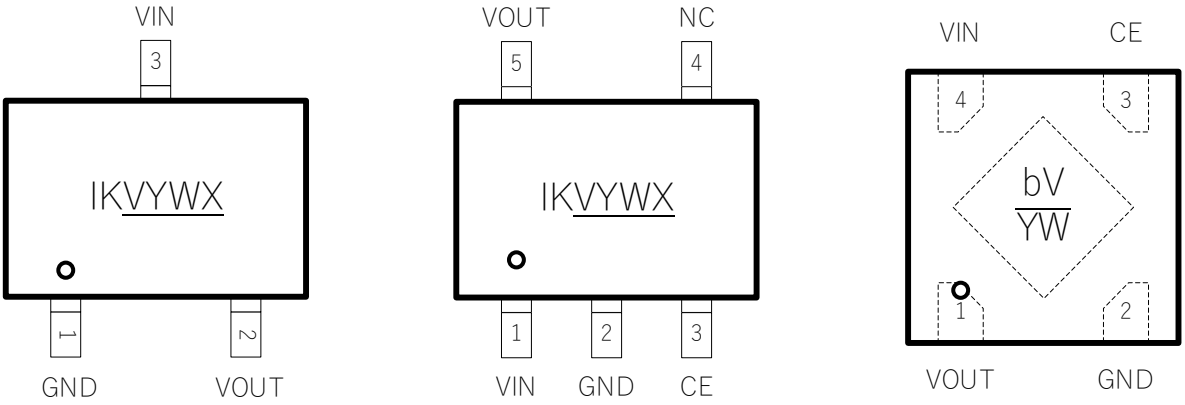

SOT23 SOT23-5L DFN1x1-4L

There are 3 packages available for ASPL1111, which are SOT23, SOT23-5L and DFN1x1-4L, with pin assignment shown in following table:

Pin Name	Package Pin #			Pin Function Description
	SOT23	SOT23-5L	DFN1x1-4L	
VIN	3	1	4	Power input, connect 1uF to ground
GND	1	2	2	Ground
CE		3	3	Chip enable, active high, internal pull down 2Mohm
NC		4		No internal connect
VOUT	2	5	1	Output of the regulator, connect 1uF to ground, 600ohm output discharge when CE disabled

MARKING INFORMATION

Top Marking

IK/b V Y W X

- X → Internal ID
- W → Week Number
  A - Z: 01 – 26
  a – z: 27 - 52
- Y → Year Code
  B - Z: 2020 - 2044
- V → Output Voltage
  Refer to code table
- IK/b → Product ID
  IK: SOT package
  b: DFN1x1

Part Number Coding

ASPL1111-VV PP

- PP → Package
  ZA: SOT23
  ZD: SOT23-5L
  TG: DFN1x1-4L
- VV → Output Voltage
  12: 1.2V
  18: 1.8V
  33: 3.3V

Output Voltage Code Table

0.5V	5	1.4V	E	2.4V	O	3.3V	Y	4.3V	i	5.3V	s
0.6V	6	1.5V	F	2.5V	P	3.4V	Z	4.4V	j	5.4V	t
0.7V	7	1.6V	G	2.6V	Q	3.5V	a	4.5V	k	5.5V	u
0.8V	8	1.7V	H	2.7V	R	3.6V	b	4.6V	l	5.6V	v
0.85V	9	1.8V	I	2.8V	S	3.7V	c	4.7V	m	5.7V	w
0.9V	0	1.9V	J	2.85V	T	3.8V	d	4.8V	n	5.8V	x
1.0V	A	2.0V	K	2.9V	U	3.9V	e	4.9V	o	5.9V	y
1.1V	B	2.1V	L	3.0V	V	4.0V	f	5.0V	p	6.0V	z
1.2V	C	2.2V	M	3.1V	W	4.1V	g	5.1V	q		
1.3V	D	2.3V	N	3.2V	X	4.2V	h	5.2V	r		

ORDER INFORMATION

Part No	Output Voltage	Package	Top Marking	Tape & Reel
ASPL1111-10ZA-R	1.0 V	SOT23	IKAYWX	3K/Reel
ASPL1111-12ZA-R	1.2 V	SOT23	IKCYWX	3K/Reel
ASPL1111-15ZA-R	1.5 V	SOT23	IKFYWX	3K/Reel
ASPL1111-18ZA-R	1.8 V	SOT23	IKIYWX	3K/Reel
ASPL1111-25ZA-R	2.5 V	SOT23	IKPYWX	3K/Reel
ASPL1111-28ZA-R	2.8 V	SOT23	IKSYWX	3K/Reel
ASPL1111-30ZA-R	3.0 V	SOT23	IKVYWX	3K/Reel
ASPL1111-33ZA-R	3.3 V	SOT23	IKYYWX	3K/Reel
ASPL1111-10ZD-R	1.0V	SOT23-5L	IKAYWX	3K/Reel
ASPL1111-12ZD-R	1.2V	SOT23-5L	IKCYWX	3K/Reel
ASPL1111-15ZD-R	1.5V	SOT23-5L	IKFYWX	3K/Reel
ASPL1111-18ZD-R	1.8V	SOT23-5L	IKIYWX	3K/Reel
ASPL1111-25ZD-R	2.5V	SOT23-5L	IKPYWX	3K/Reel
ASPL1111-28ZD-R	2.8V	SOT23-5L	IKSYWX	3K/Reel
ASPL1111-30ZD-R	3.0V	SOT23-5L	IKVYWX	3K/Reel
ASPL1111-33ZD-R	3.3V	SOT23-5L	IKYYWX	3K/Reel
ASPL1111-10TG-R	1.0V	DFN1x1-4L	bA YW	5K/Reel
ASPL1111-12TG-R	1.2V	DFN1x1-4L	bC YW	5K/Reel
ASPL1111-15TG-R	1.5V	DFN1x1-4L	bF YW	5K/Reel
ASPL1111-18TG-R	1.8V	DFN1x1-4L	bI YW	5K/Reel
ASPL1111-25TG-R	2.5V	DFN1x1-4L	bP YW	5K/Reel
ASPL1111-28TG-R	2.8V	DFN1x1-4L	bS YW	5K/Reel
ASPL1111-30TG-R	3.0V	DFN1x1-4L	bV YW	5K/Reel
ASPL1111-33TG-R	3.3V	DFN1x1-4L	bY YW	5K/Reel

Note: ”R” stands for Packing, Tape&Reel.

ABSOLUTE MAXIMUM RATINGS

V_{IN} (1) ..... -0.3V to +8V
V_{CE}, V_{OUT} (1) ..... -0.3V to V_{IN}
Continuous Power Dissipation (T_A = 25°C) (2)
SOT23 ..... 0.3W
SOT23-5L 0.4W
DFN1x1-4L 0.4W
Max Operation Junction Temperature ..... 150°C
Operation Junction Temperature ..... -40°C to 125°C
Lead Temperature ..... 260°C 10s
Storage Temperature ..... -65°C to 150°C
Thermal Resistance (3) θ_{JA} θ_{JC}
SOT23 ..... 280°C /W ..... 90°C /W
SOT23-5L ..... 220°C /W ..... 75°C /W
DFN1x1-4L ..... 225°C /W ..... 45°C /W

Notes:
(1) Exceeding these ratings may damage the device.
(2) The maximum allowable power dissipation is a function of the maximum junction temperature T_J(MAX), the junction-to-ambient thermal resistance θ_{JA}, and the ambient temperature T_A. The maximum allowable continuous power dissipation at any ambient temperature is calculated by $P_D(MAX)=(T_J(MAX)-T_A)/\theta_{JA}$. Exceeding the maximum allowable power dissipation will cause excessive die temperature, and the regulator will go into thermal shutdown. Internal thermal shutdown circuitry protects the device from permanent damage.
(3) Measured on JESD51-7, 4-layer PCB.

ELECTRICAL CHARACTERISTICS

All typical values are at Tj=25°C (unless otherwise noted)

PARAMETER	CONDITIONS	MIN	TYP	MAX	UNITS
Input voltage range, V_{IN}		1.7		7	V
Output voltage range, V_{OUT}		0.8		3.3	V
Output voltage accuracy	I_{LOAD} = 1mA, V_{IN} = 4V		1	2	%
Ground supply, I_{GND}	I_{LOAD} = 0mA		35	50	uA
Maximum output current	$V_{IN} - V_{OUT}$ = 1V	300			mA
Line regulation	I_{LOAD} = 1mA		0.01	0.02	%/V
Load regulation	I_{LOAD} = 0 - 300mA		15	30	mV
Dropout voltage	I_{LOAD} = 300mA, V_{OUT} = 3.3V		300	500	mV
Output current limit		350	450	600	mA
Short circuit current			140		mA
Temperature Coefficient		-100		100	ppm
PSRR	V_{IN} = V_{OUT} + 0.5V, I_{LOAD} = 10mA		85		dB
Startup time			75	100	us
Output noise				100	uV

PARAMETER	CONDITIONS	MIN	TYP	MAX	UNITS
CE high threshold				1	V
CE low threshold		0.4			V
Shutdown current	V_{CE} = 0V			1	uA
Over Temperature Protection		130	150	170	°C
OTP hysteresis			30		°C

FUNCTION DESCRIPTIONS

The ASPL1111 is a 300mA linear regulator, which can work under a wide voltage range from 1.7V to 7V and provide a stable output voltage within 2% accuracy. With its outstanding performance of 85dB PSRR at 1KHz, ASPL1111 is very suitable for powering critical analog devices like camera sensors, RF module, MEMS modules that widely adopted in all kinds of electronic systems.

The ASPL1111 also has variety of protection features to keep itself survive from unexpected working environment, such as over temperature, output over current, output short circuits. Especially when output is in short circuit, ASPL1111 will automatically decrease load current to about 140mA, and thus, the heat generated in the chip is cut by half, which guarantees a better reliability during such harsh circumstance.

FUNCTION DIAGRAM

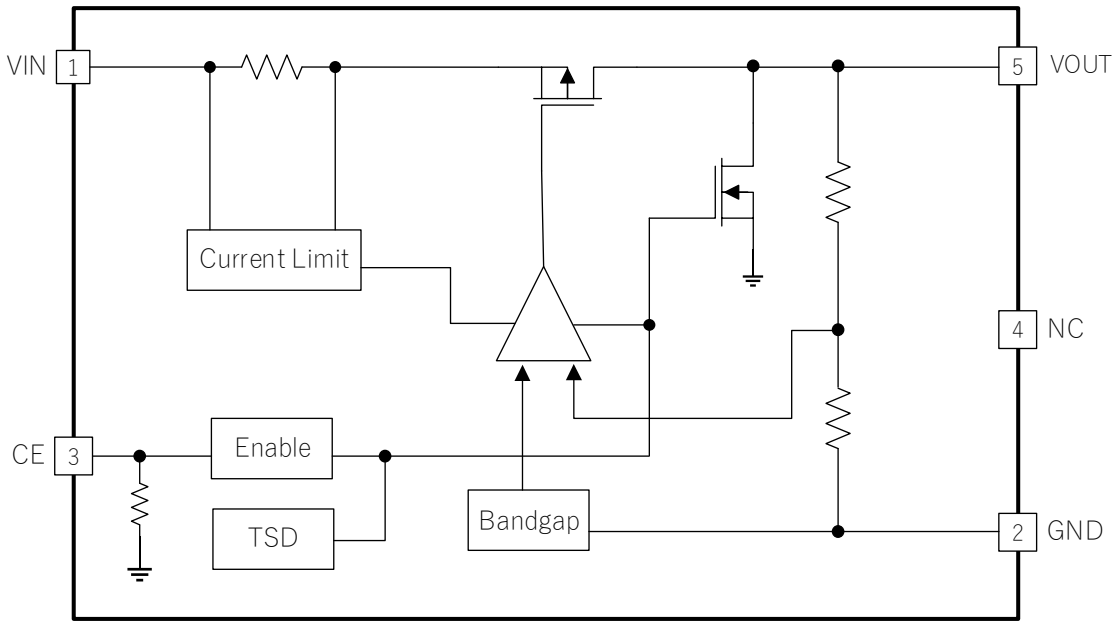

TYPICAL CHARACTERISTICS

T_A = 25°C, Cin=1uF, Cout=1uF, unless otherwise specified

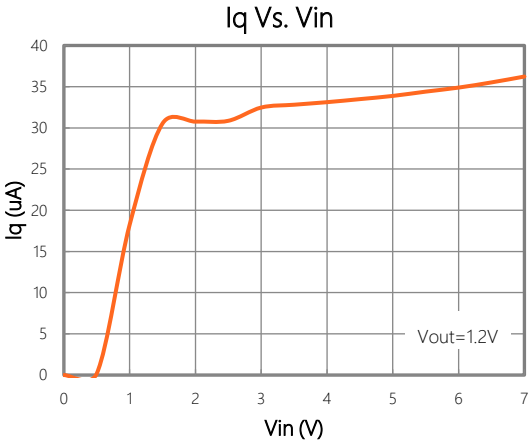

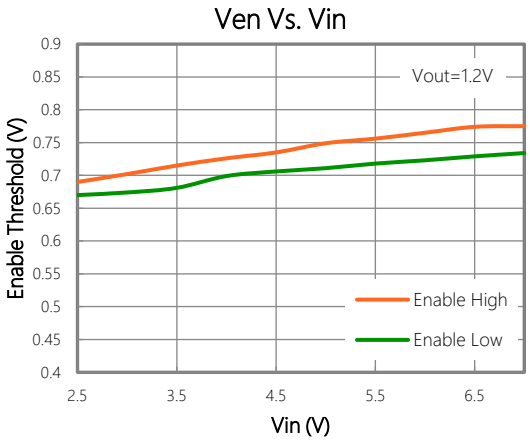

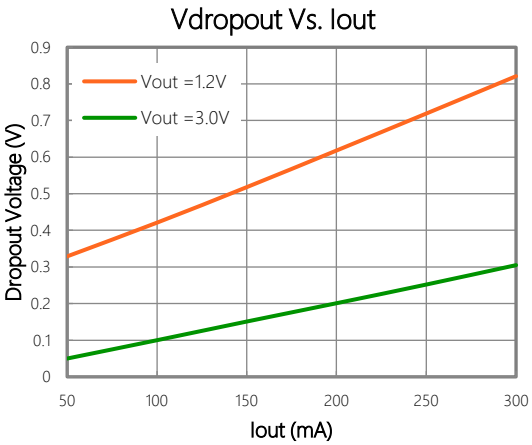

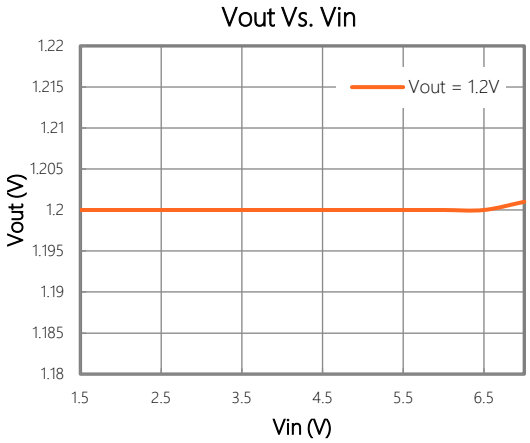

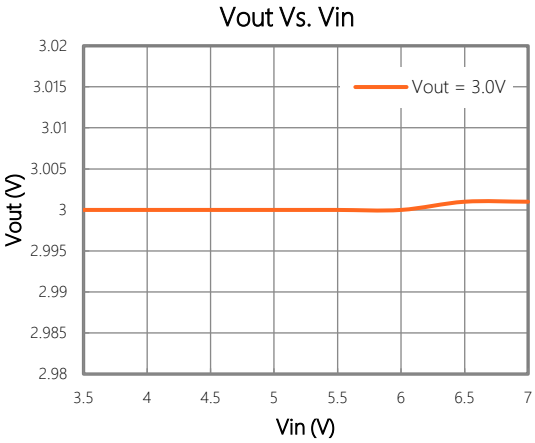

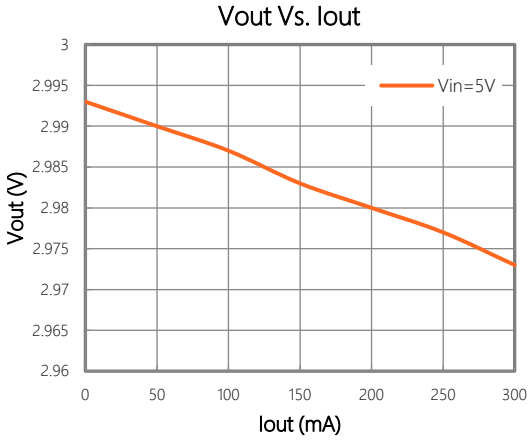

TYPICAL CHARACTERISTICS

T_A = 25°C, Cin=1uF, Cout=1uF, unless otherwise specified

Vout Vs. Temp

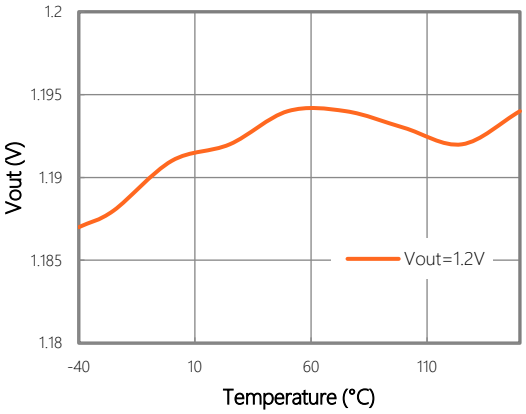

Iq Vs. Temp

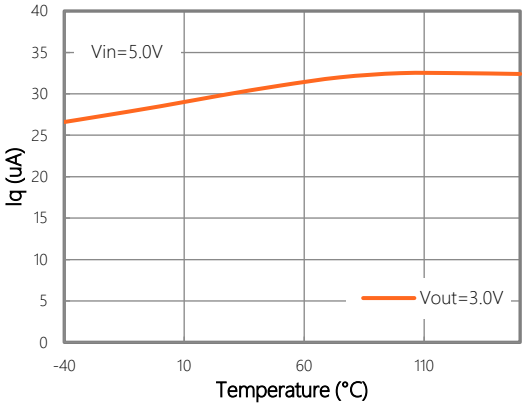

Power ON, Load=10ohm, Vout=3.0V

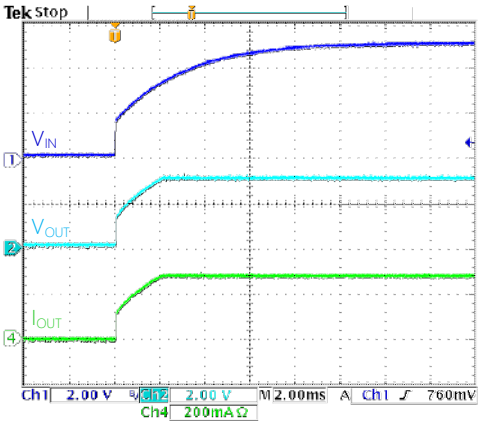

Power OFF, Load=10ohm, Vout=3.0V

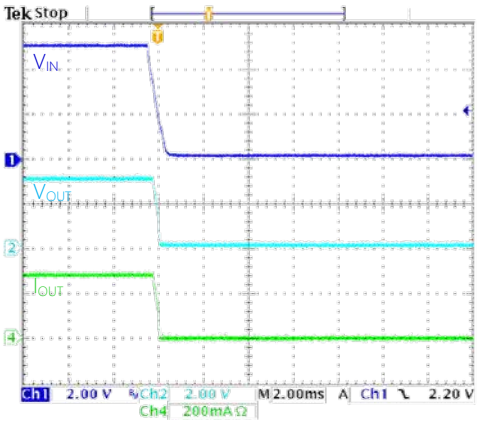

Enable ON, Load=10ohm, Vin=5.0V

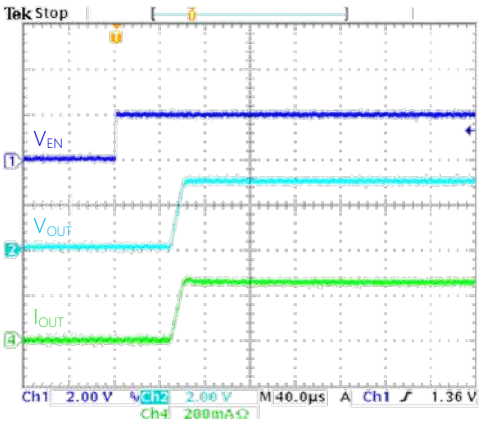

Enable OFF, Load=10ohm, Vin=5.0V

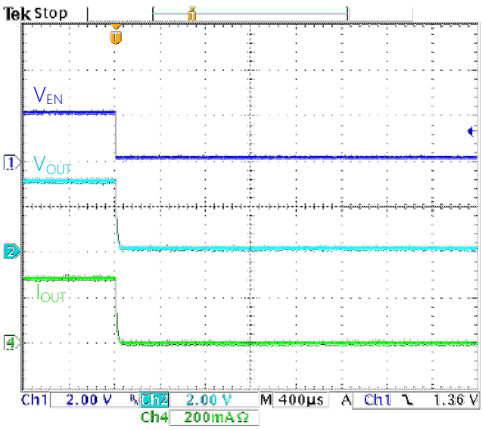

TYPICAL CHARACTERISTICS

T_A = 25°C, Cin=1uF, Cout=1uF, unless otherwise specified

Line Transient, No Load, Vout=1.2V

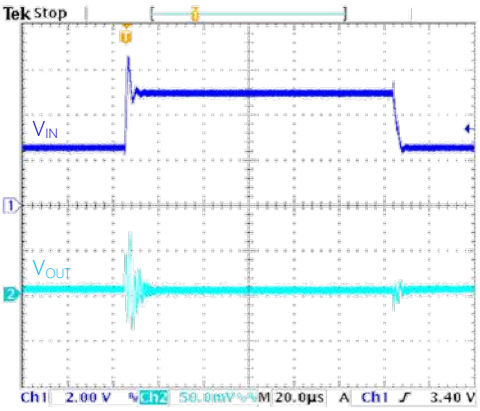

Load Transient, Vin=2.5V, Vout=1.2V

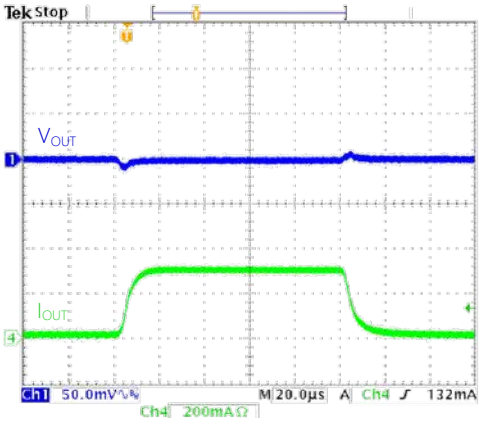

PACKAGE OUTLINE

Package SOT23 Devices per reel 3000 pcs

Package dimension (mm):

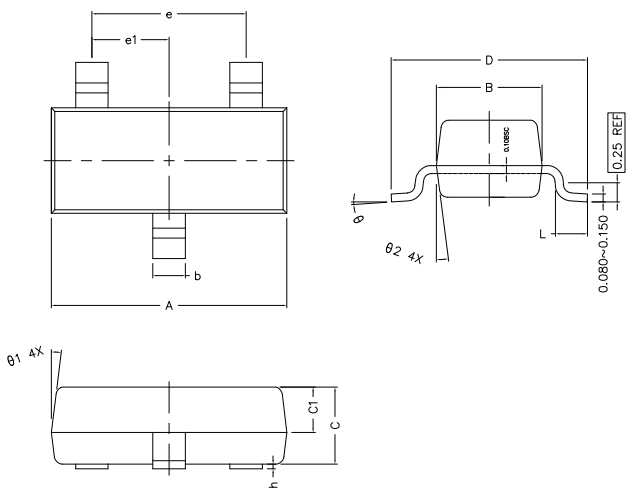

Symbol	MIN	NORM	MAX
A	2.800	2.900	3.000
B	1.200	1.300	1.400
C	0.900	1.000	1.1 00
C1	0.500	0.550	0.600
D	2.250	2.400	2.550
L	0.300	0.400	0.500
h	0.010	0.050	0.100
b	0.300	0.400	0.500
e	1.90 TYP		
e1	0.95 TYP		
θ1	7° TYP		
θ2	7° TYP		
θ	0°~7°		

Package SOT23-5L Devices per reel 3000 pcs

Package dimension (mm):

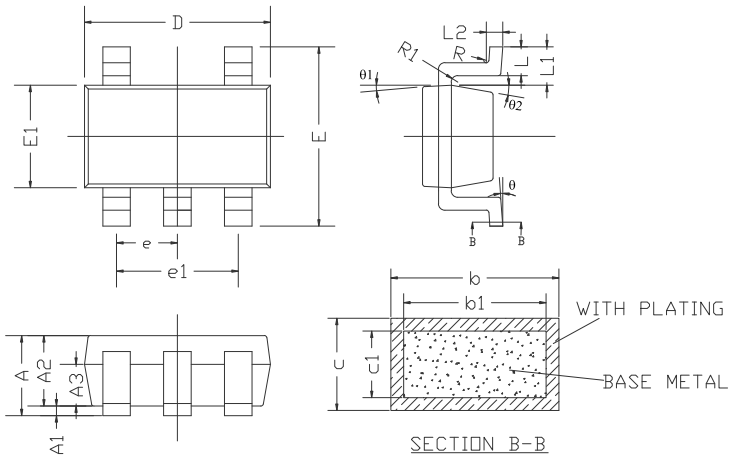

Symbol	MIN,	NOM.	MAX
A	–	–	1.25
A1	0.00	–	0.15
A2	1.00	1.10	1.20
A3	0.60	0.65	0.70
b	0.36	–	0.50
b1	0.36	0.38	045
C	0.14	–	0.20
c1	0.14	0.15	0.16
D	2.826	2.926	3.026
E	2.60	2.80	3.00
E1	1.526	1.626	1.726
e	0.90	0.95	1.00
e1	1.80	1.90	2.00
L	0.35	0.45	0.60
L1	0.59 REF		
L2	0.25 BSC		
R	0.05	–	–
R1	0.05	–	0.20
Θ	0°	–	8°
Θ1	3°	5°	7°
Θ2	6°	–	14°

Package DFN1x1-4L Devices per reel 5000 pcs

Package dimension (mm):

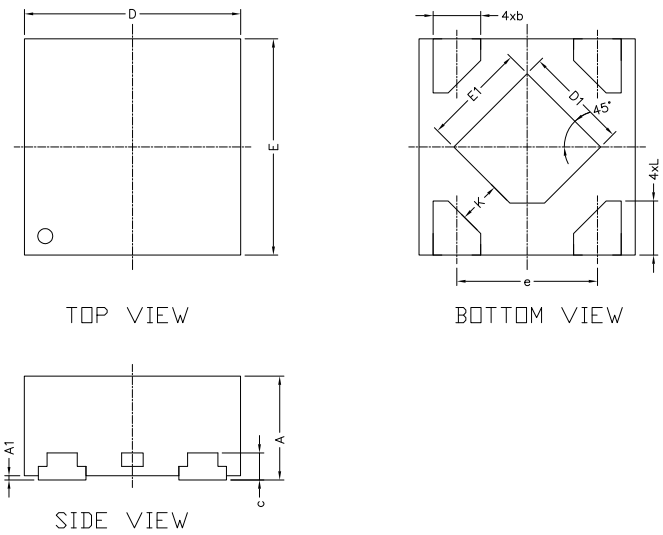

Symbol	Min	NOM	MAX
A	0.43	0.48	0.53
A1			0.05
b	0.17	0.22	0.27
C		0.127	
D	0.95	1.00	1.05
D1	0.43	0.48	0.53
E	0.95	1.00	1.05
E1	0.43	0.48	0.53
e	0.65 BSC		
K	0.15		
L	0.20	0.25	0.30

IMPORTANT NOTICE

ShenZhen Ascend Semiconductor incorporated MAKES NO WARRANTY OF ANY KIND, EXPRESS OR IMPLIED, WITH REGARDS TO THIS DOCUMENT, INCLUDING, BUT NOT LIMITED TO, THE IMPLIED WARRANTIES OF MERCHANTABILITY AND FITNESS FOR A

PARTICULAR PURPOSE (AND THEIR EQUIVALENTS UNDER THE LAWS OF ANY JURISDICTION).

ShenZhen Ascend Semiconductor Incorporated and its subsidiaries reserve the right to make modifications, enhancements, improvements, corrections or other changes without further notice to this document and any product described herein. ShenZhen Ascend Semiconductor Incorporated does not assume any liability arising out of the application or use of this document or any product described herein; neither does ShenZhen Ascend Semiconductor Incorporated convey any license under its patent or trademark rights,

nor the rights of others. Any Customer or user of this document or products described herein in such applications shall assume .

all risks of such use and will agree to hold Ascendsemi Incorporated and all the companies whose products are represented on ShenZhen Ascend Semiconductor Incorporated website, harmless against all damages.

ShenZhen Ascend Semiconductor Incorporated does not warrant or accept any liability whatsoever in respect of any products purchased through unauthorized sales channel. Should Customers purchase or use ShenZhen Ascend Semiconductor Incorporated products for any unintended or unauthorized application, Customers shall indemnify and hold ShenZhen Ascend Semiconductor Incorporated and its representatives harmless against all claims, damages, expenses, and attorney fees arising out of, directly or indirectly, any claim of personal injury or death associated with such unintended or unauthorized application.

www.ascendsemi.com